KAISSU DRAWER 1x4

1

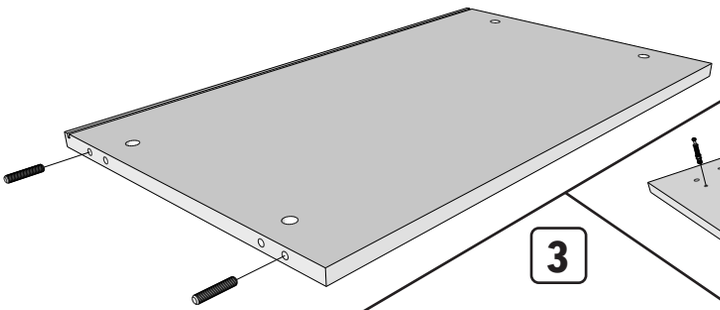

2

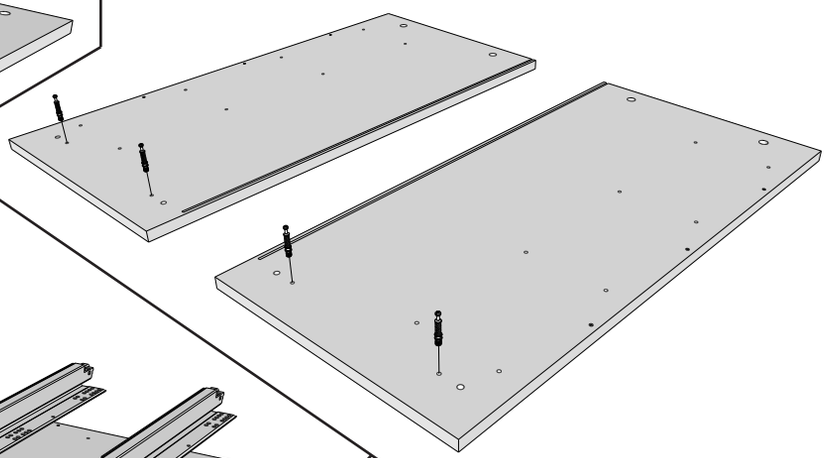

3

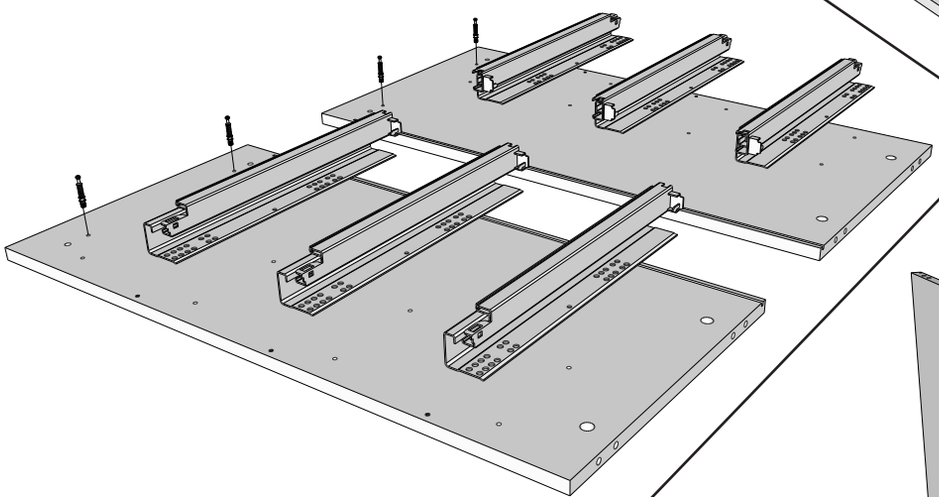

4

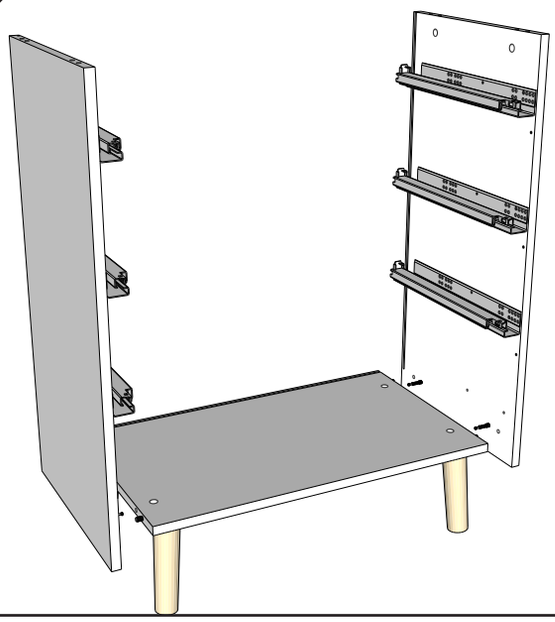

5

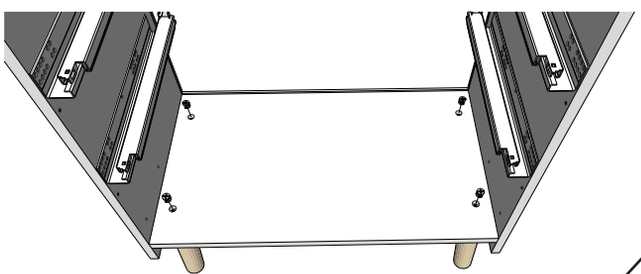

6

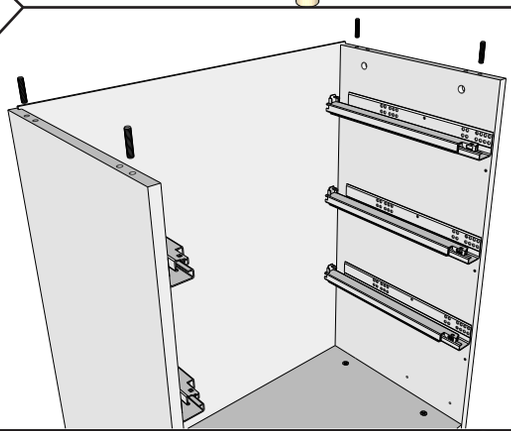

7

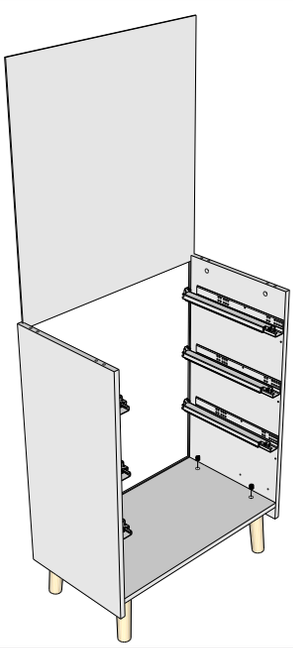

8

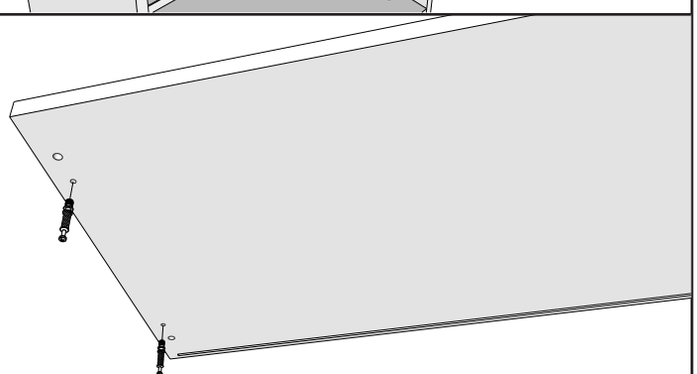

9

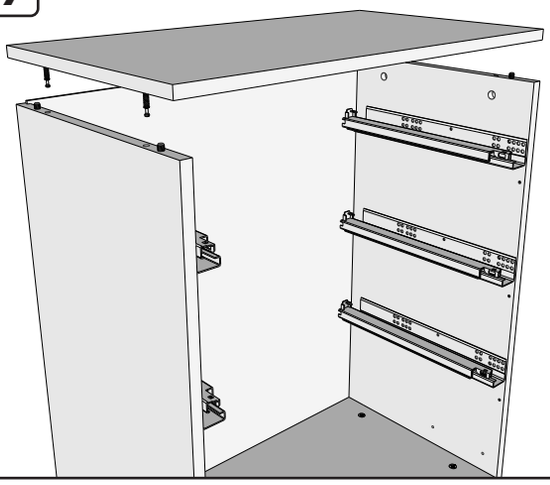

10

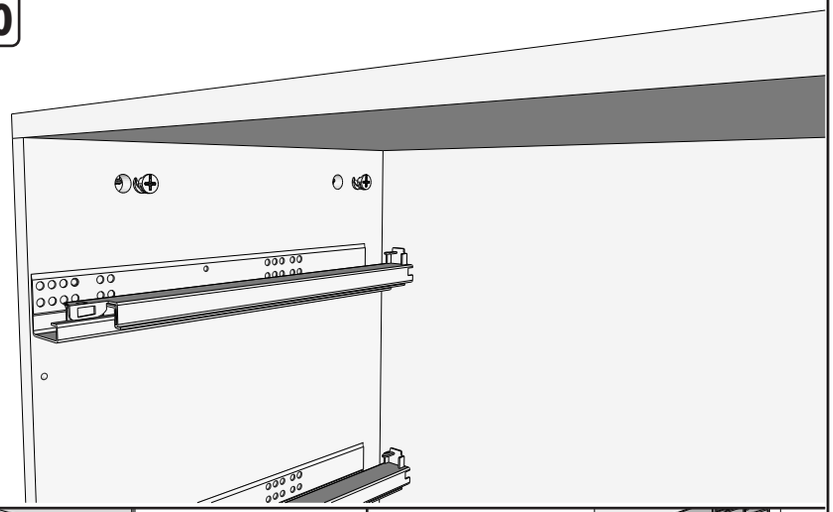

11

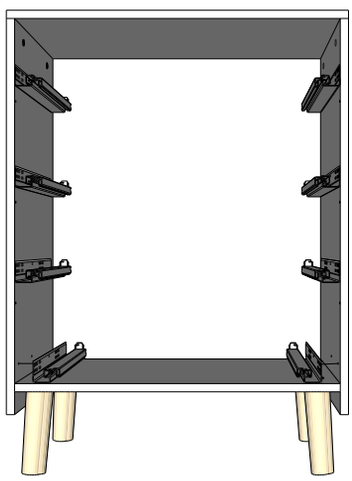

12a

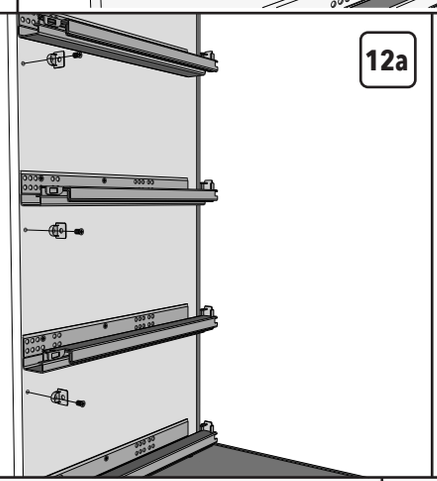

12b

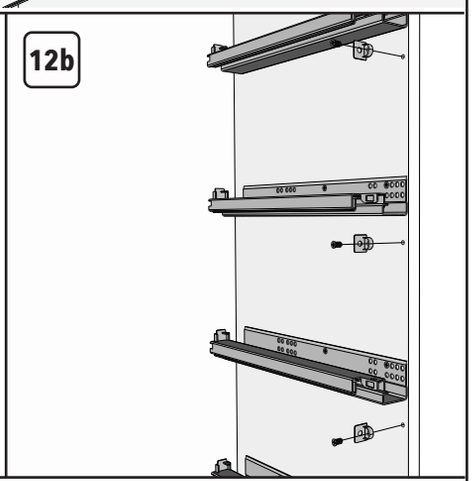

14a

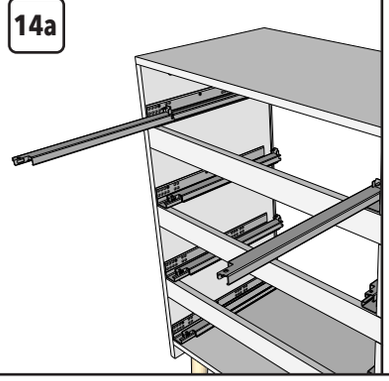

14b

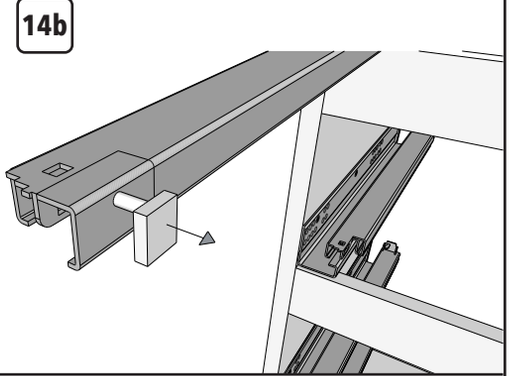

13

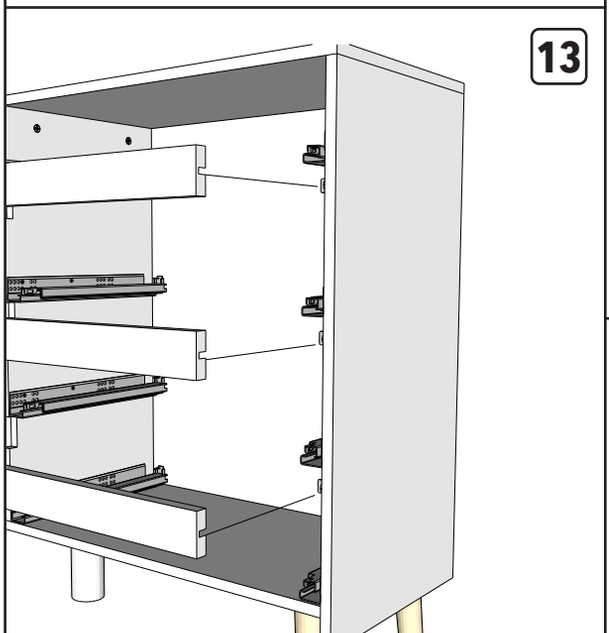

16

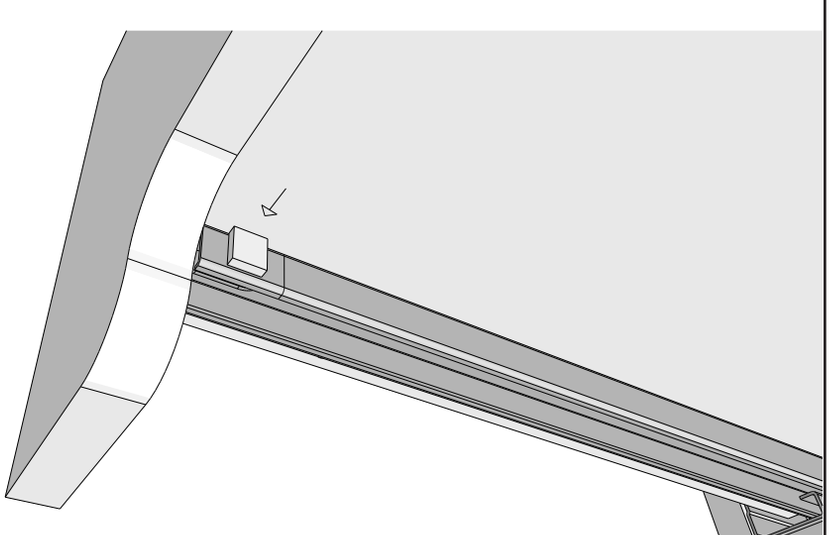

15

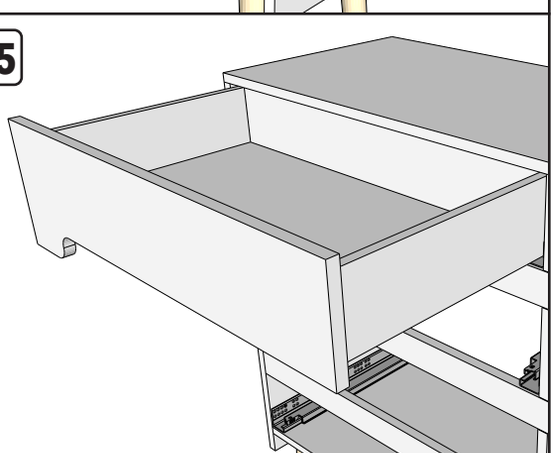

DRAWER 1x4 ASSEMBLY

1

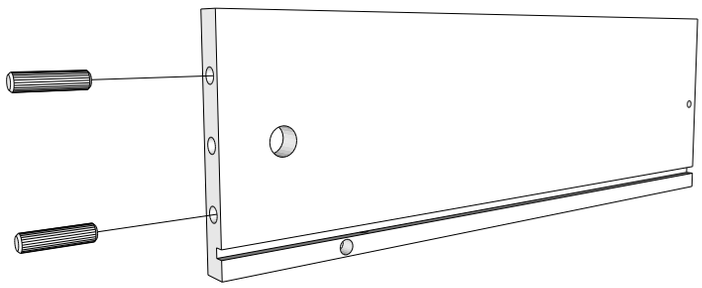

2

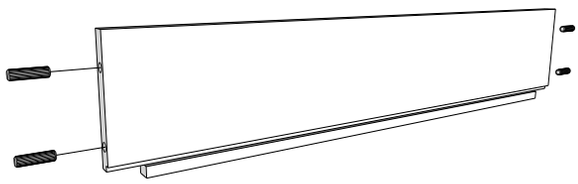

3

4

5

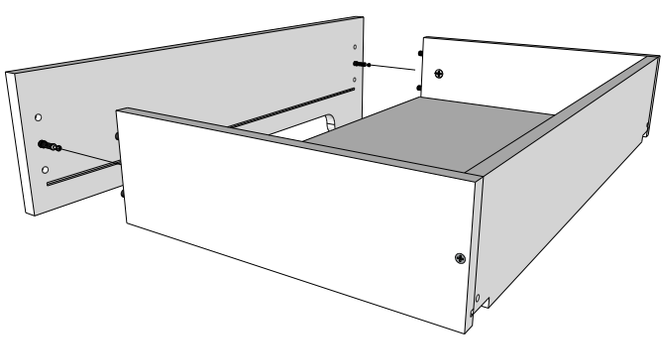
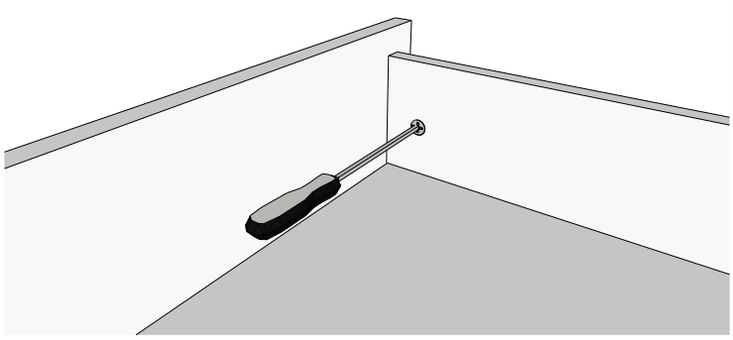
6